ANTRON ELECTRONICS CO. LTD.

CSS-UV42PBMS@120V	
Ballast Type	Electronic
Starting Method	Program Start
Lamp Connection	Series
Input Voltage	120-277
Input Frequency	50/60HZ
Status	Active
Safety Approval	UL/CUL

ELECTRICAL SPECIFICATIONS

Lamp Type	NO. of Lamps	Rated Lamp Watts	Min Start Temp (°F/C)	Input Current (Amps)	Input Power (ANSI Watts)	Ballast Factor	MAX THD %	Power Factor	MAX Lamp Current Crest Factor	BEF
PLT26W	2	26	-22/-30	0.42	53	0.98	10	0.99	1.7	1.85
PLT42W	1	42	-22/-30	0.31	39	0.91	10	0.99	1.7	2.33
PLT32W	1	32	-22/-30	0.25	30	0.91	10	0.99	1.7	3.03
PLT26W	1	26	-22/-30	0.22	27	1	10	0.99	1.7	3.70
PLL40W	1	40	-22/-30	0.3	37	0.89	10	0.99	1.7	2.41
PLL39W	1	39	-22/-30	0.24	29	0.56	10	0.99	1.7	1.93
PLL36W	1	36	-22/-30	0.23	28	0.83	10	0.99	1.7	2.96
PLL24W	1	24	-22/-30	0.18	22	0.91	15	0.99	1.7	4.14
2D28W	1	28	-22/-30	0.23	28	0.76	10	0.99	1.7	2.71

Wiring Diagram

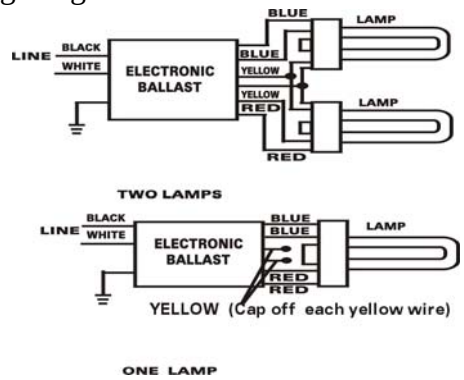

Enclosure

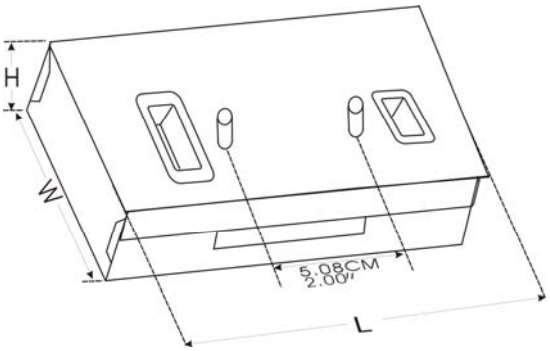

Standard Lead Length(inch/cm)

	in.	cm.		in.	cm.
Black			Yellow/Blue		
White			Blue/White		
Blue			Brown		
Red			Orange		
Yellow			Orange/Black		
Gray			Black/White		
Violet			Red/White		

Over All(L)	Width(W)	Height(H)	Mounting(M)
11.6cm	6.3cm	3cm	
4.57"	2.48"	1.18"	

Revised 04/28/2006

Data is based upon tests performed by Antron Electronics in a controlled environment and representative performance. Actual performance can vary depending on operating conditions. Specifications are subject to change without notice. All specifications are nominal unless otherwise noted

ANTRON ELECTRONICS CO., LTD
NO.17-14 LAI-KAN LIAW HI-CHIEN LI CHIALI DIST TAINAN CITY TAIWAN R.O.C
TEL:(886)-6-7263906-7 FAX:(886)-6-7263908
http://www.antron.com.tw E-mail:sales@antron.com.tw

ANTRON ELECTRONICS CO. LTD.

CSS-UV42PBMS@230V	
Ballast Type	Electronic
Starting Method	Program Start
Lamp Connection	Series
Input Voltage	120-277
Input Frequency	60HZ
Status	Active
Safety Approval	UL/CUL

ELECTRICAL SPECIFICATIONS

Lamp Type	NO. of Lamps	Rated Lamp Watts	Min Start Temp (°F/C)	Input Current (Amps)	Input Power (ANSI Watts)	Ballast Factor	MAX THD %	Power Factor	MAX Lamp Current Crest Factor	BEF
PLT26W	2	26	-22/-30	0.22	53	0.98	15	0.99	1.7	1.85
PLT42W	1	42	-22/-30	0.17	39	0.91	15	0.99	1.7	2.33
PLT32W	1	32	-22/-30	0.13	30	0.91	15	0.99	1.7	3.03
PLT26W	1	26	-22/-30	0.11	27	1	15	0.99	1.7	3.70
PLL40W	1	40	-22/-30	0.16	37	0.89	15	0.99	1.7	2.41
PLL39W	1	39	-22/-30	0.13	29	0.56	15	0.99	1.7	1.93
PLL36W	1	36	-22/-30	0.12	28	0.83	15	0.99	1.7	2.96
PLL24W	1	24	-22/-30	0.1	22	0.91	15	0.98	1.7	4.14
2D28W	1	28	-22/-30	0.12	28	0.76	15	0.99	1.7	2.71

Wiring Diagram

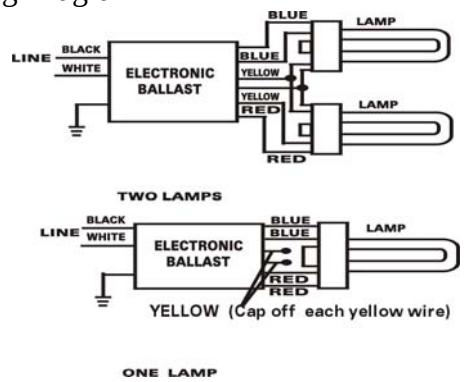

Enclosure

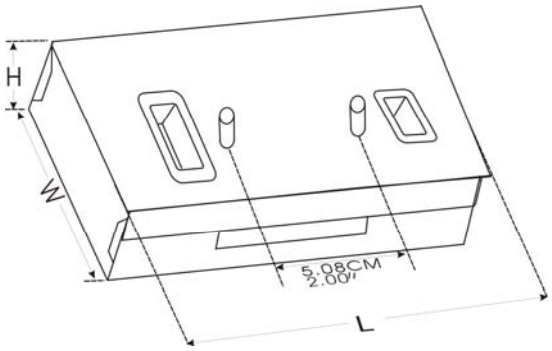

Standard Lead Length(inch/cm)

	in.	cm.		in.	cm.
Black			Yellow/Blue		
White			Blue/White		
Blue			Brown		
Red			Orange		
Yellow			Orange/Black		
Gray			Black/White		
Violet			Red/White		

Over All(L)	Width(W)	Height(H)	Mounting(M)
11.6cm	6.3cm	3cm	
4.57"	2.48"	1.18"	

Revised 04/28/2006

Data is based upon tests performed by Antron Electronics in a controlled environment and representative performance. Actual performance can vary depending on operating conditions. Specifications are subject to change without notice. All specifications are nominal unless otherwise noted

ANTRON ELECTRONICS CO., LTD
NO.17-14 LAI-KAN LIAW HI-CHIEN LI CHIALI DIST TAINAN CITY TAIWAN R.O.C
TEL:(886)-6-7263906-7 FAX:(886)-6-7263908
http://www.antron.com.tw E-mail:sales@antron.com.tw

ANTRON ELECTRONICS CO. LTD.

CSS-UV42PBMS@277V	
Ballast Type	Electronic
Starting Method	Program Start
Lamp Connection	Series
Input Voltage	120-277
Input Frequency	60HZ
Status	Active
Safety Approval	UL/CUL

ELECTRICAL SPECIFICATIONS

Lamp Type	NO. of Lamps	Rated Lamp Watts	Min Start Temp (°F/C)	Input Current (Amps)	Input Power (ANSI Watts)	Ballast Factor	MAX THD %	Power Factor	MAX Lamp Current Crest Factor	BEF
PLT26W	2	26	-22/-30	0.19	53	0.98	15	0.99	1.7	1.85
PLT42W	1	42	-22/-30	0.14	39	0.91	15	0.98	1.7	2.33
PLT32W	1	32	-22/-30	0.11	30	0.91	15	0.98	1.7	3.03
PLT26W	1	26	-22/-30	0.1	27	1	15	0.98	1.7	3.70
PLL40W	1	40	-22/-30	0.13	37	0.89	15	0.98	1.7	2.41
PLL39W	1	39	-22/-30	0.11	29	0.56	15	0.98	1.7	1.93
PLL36W	1	36	-22/-30	0.1	28	0.83	15	0.98	1.7	2.96
PLL24W	1	24	-22/-30	0.08	22	0.91	30	0.95	1.7	4.14
2D28W	1	28	-22/-30	0.1	28	0.76	15	0.98	1.7	2.71

Wiring Diagram

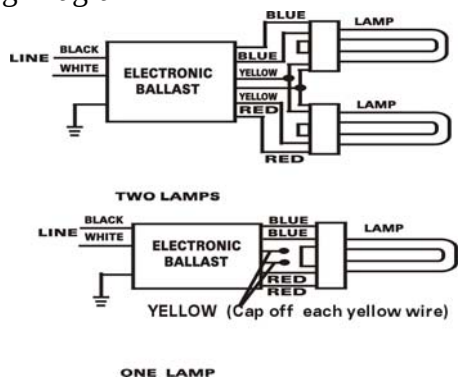

Enclosure

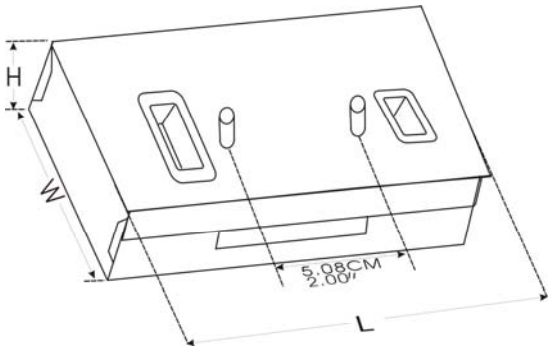

Standard Lead Length(inch/cm)

	in.	cm.		in.	cm.
Black			Yellow/Blue		
White			Blue/White		
Blue			Brown		
Red			Orange		
Yellow			Orange/Black		
Gray			Black/White		
Violet			Red/White		

Over All(L)	Width(W)	Height(H)	Mounting(M)
11.6cm	6.3cm	3cm	
4.57"	2.48	1.18	

Revised 04/28/2006

Data is based upon tests performed by Antron Electronics in a controlled environment and representative performance. Actual performance can vary depending on operating conditions. Specifications are subject to change without notice. All specifications are nominal unless otherwise noted

ANTRON ELECTRONICS CO., LTD
NO.17-14 LAI-KAN LIAW HI-CHIEN LI CHIALI DIST TAINAN CITY TAIWAN R.O.C
TEL:(886)-6-7263906-7 FAX:(886)-6-7263908
http://www.antron.com.tw E-mail:sales@antron.com.tw